Rotary Discharge Machine

AUMUND

CONTENT

2	Rotary Discharge Machines
3	Rotary Discharge Machine type BEW-BL
6	Rotary Discharge Machine type BEW-BL
7	Data Sheet
9	Rotary Discharge Machine type BEW-FL
10	Rotary Discharge Machine type BEW-FL with Weigh Feeder
11	Data Sheet
12	Rotating Rotary Discharge Machine type BEW-K
15	Bulk Material testing in our laboratory
16	Components
18	Conversions and Refurbishments
19	After Sales Service

Rotary Discharge Machines

For a variety of applications wherever difficult bulk material needs to be discharged from

- Rectangular hoppers
- Open stockpiles
- Large cylindrical silos

All LOUISE Rotary Discharge Machines feature the logarithmically shaped discharge arms and automatic operation including reverse travel.

Three basic alternatives:
- Block Model type BEW-BL
- Low Profile Model type BEW-FL
- Rotating Model type BEW-K

Materials which can be handled:
- FGD-gypsum
- Coal
- Gypsum
- Limestone
- Lignite
- Clay
- Marl
- Petcoke

Rotary Discharge Machine type BEW-BL

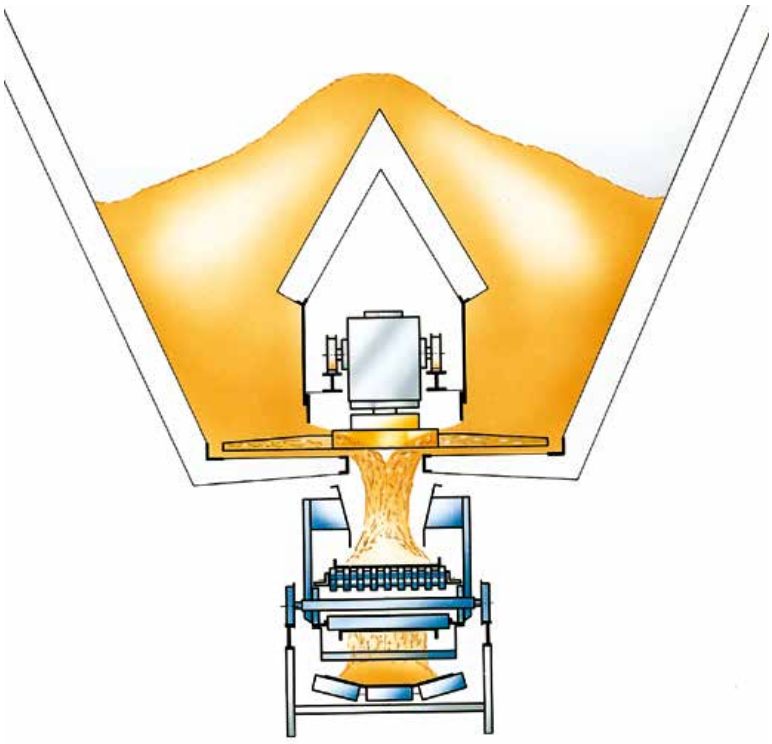

Double side discharge for rectangular hoppers

The block-type Rotary Discharge Machine is designed for double side discharge.

All drive components are located in a solid casing.

The machine moves inside a tunnel and reclaims the product from both sides.

The hydraulic unit or the frequency controller allows to adjust the reclaim capacity.

Rotary Discharge Machine type BEW-BL

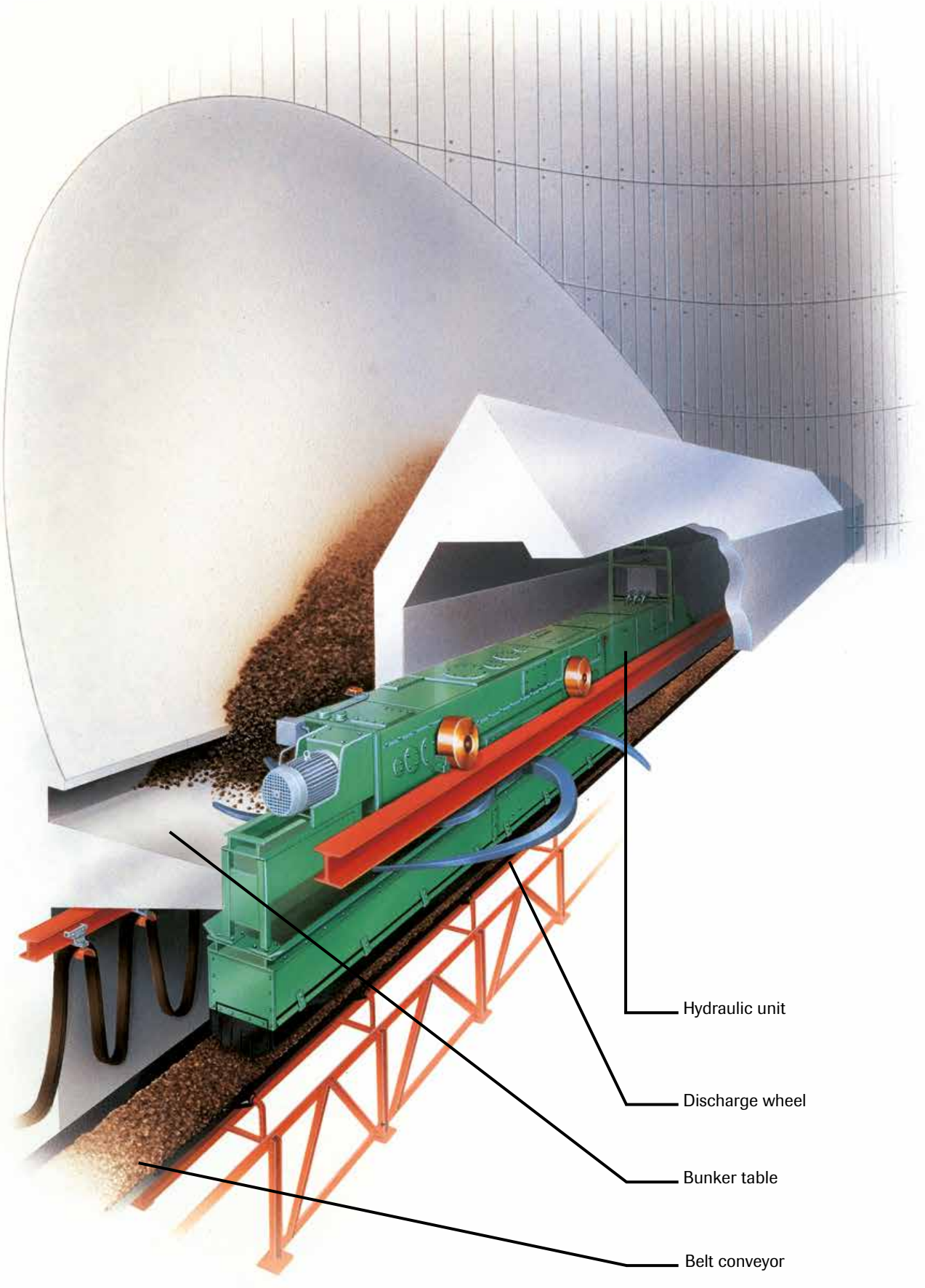

Denpatsu coal-fired power plant

Shikoku plant

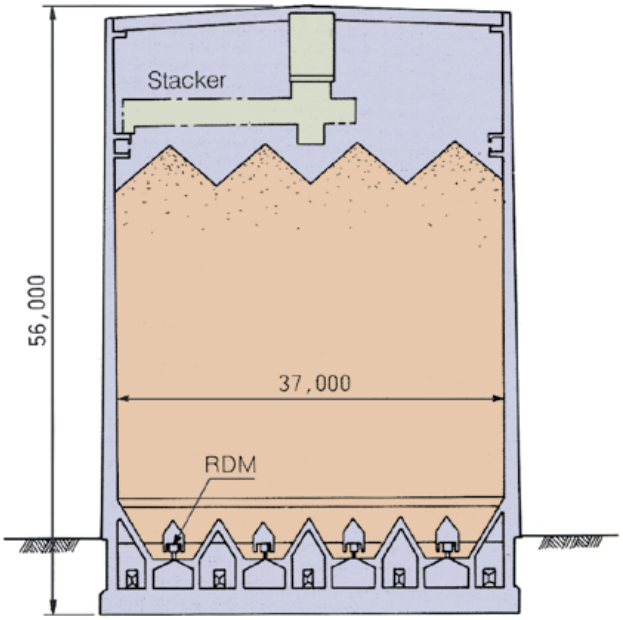

Cross section of Okinawa coal silo

Storage capacity of the 4 silos	50,000 m^3
Diameter of each silo	37 m
Height of each silo	56 m
Discharge capacity of each discharge machine	adjustable from 40 t/h to 400 t/h
Installed power	37 kW
Travel speed	0.92 to 3.72 m/min
Diameter of discharge wheel	4,000 mm

Coal storage and reclaim

The Ishikawa power plant, Okinawa - Japan, features four silos with a storage volume of 50,000 m^3. These silos, ranging among the largest worldwide, were built by Mitsui Construction Co. Ltd.

The coal is discharged by four Rotary Discharge Machines arranged parallel to each other. Each discharge machine travels on rails installed in a concrete tunnel covering the whole length of the silos. This arrangement allows each individual machine to discharge from either one of the four silos. The travel distance exceeds 200 m.

The block-type discharge machine is designed in such a way that the coal is reclaimed from both- sides of the shelf. Each machine has a reclaim capacity of 40 t/h – 400 t/h and both the discharge wheel and the travel mechanism are hydraulically driven and adjustable. The discharge wheel's diameter of 4 m allows to cut deeply into the material column, an important feature to prevent bridging of the stored product. A material guide installed on the BEW serves as dust cover and guides the product onto the belt conveyor located underneath the Rotary Discharge Machine.

At the Shikoku coal-fired power plant of Electric Power Development Co. Ltd., the coal storage silos feature 8 Rotary Discharge Machines each reclaiming 1,000 t/h coal from two rows of 4 silos each. At the Denpatsu plant, 8 Rotary Discharge Machines reclaim from 2 rows of 2 silos each.

Rotary Discharge Machine type BEW-BL

Coal Handling – American Superior Midwest Energy Terminal, Wisconsin – USA

The coal extracted in open-cast mining is stored on an open stockpile during the winter season when shipping service is interrupted due to low temperatures. 6.5 million tons of coal can be stored on this open stockpile until the end of the winter season.

A total of 9 Rotary Discharge Machines reclaim the coal from this stockpile. Three machines each work in one unit and achieve a total reclaim capacity of 10,000 t/h. With this capacity and a discharge wheel diameter of 4 m, they range among the best performing reclaimers worldwide.

The discharge machines travel on rails inside a tunnel with a cone-shaped roof, continuously discharging the coal onto a belt conveyor also installed in the tunnel. When travelling back and forth, the discharge arms dig deeply into the coal through slots arranged in the tunnel. Each rotary discharge machine is driven by a 2.2 kW motor and travels the distance of 360 m with a velocity of 0.9 m/min.

In order to achieve a high torque with only 1 to 10 rpm, the discharge wheels are actuated by hydraulic units with 110 kW electric motor. If the discharge machines encounter high resistance due to the frozen status of the coal, the pressure sensors actuate the reverse mode and restart the machine. The drive unit is installed inside a compact casing with easy access.

The machines are in operation since 1976 and demonstrate the high availability of the LOUISE Rotary Discharge Machines.

Storage capacity	open stockpile, 6.5 million tons
Stockpile length	360 m
Discharge capacity of each discharge machine	3,300 t/h
Installed power	150 kW
Rotating speed of discharge wheels	adjustable from 1 to 10 rpm
Diameter of discharge wheels	4,000 mm
Travel speed	0.9 m/min

Data sheet

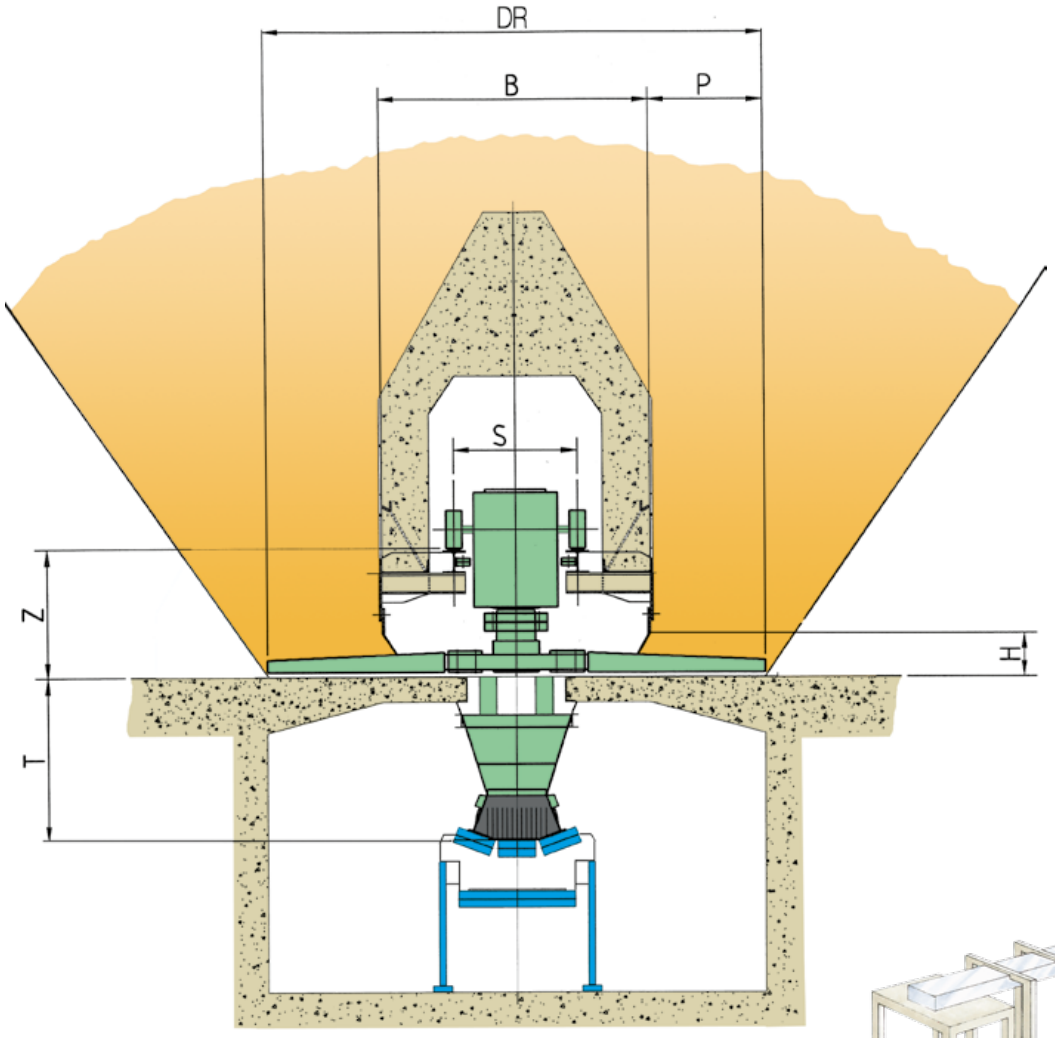

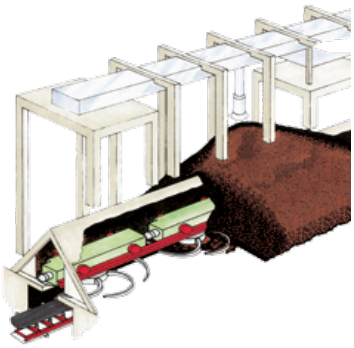

Rotary Discharge Machine type BEW-BL

discharge wheel diameter	discharge opening height	penetration depth	cone-shaped tunnel width	rail to hopper shelf height	hopper shelf to belt feeder height	theoretical capacity Q (m^3/h) both-sided discharge with wheel speed n (rpm) range 1:10 circular speed at wheel tip				max. admissible travel speed
DR	**H**	**P**	**B**	**Z**	**T**	**U = 0.3** m/s		**U = 3.0** m/s		**V**
(mm)	(mm)	(mm)	(mm)	(mm)	(mm)	(m^3/h)	(rpm)	(m^3/h)	(rpm)	(m/min)
2,000	200	350	1,300	600	1,000	94	(2.90)	940	(29.0)	6.35
2,500	250	450	1,600	775	1,100	138	(2.28)	1,380	(22.8)	6.35
3,000	300	700	1,600	775	1,100	225	(1.91)	2,250	(19.1)	6.35
4,000	400	1,000	2,000	1,030	1,200	410	(1.43)	4,100	(14.3)	6.35
5,000	500	1,150	2,700	1,030	1,200	580	(1.14)	5,800	(11.4)	6.35

Standard dimensions and capacity. Further dimensions and capacities on request.

BEW with single sided discharge

Discharge wheel with six arms, each with wear resistant front plate and armoured tip.

View onto discharge wheel

BEW with single sided discharge

- Festoon towing arm
- Safety limit switch
- Anti-collision sensor
- Travel distance sensor
- Travel distance limit switch
- Local control box
- Discharge wheel dust cover

BEW with single sided discharge

BEW with single sided discharge and double swivel mechanism

Rotary Discharge Machine type BEW-FL

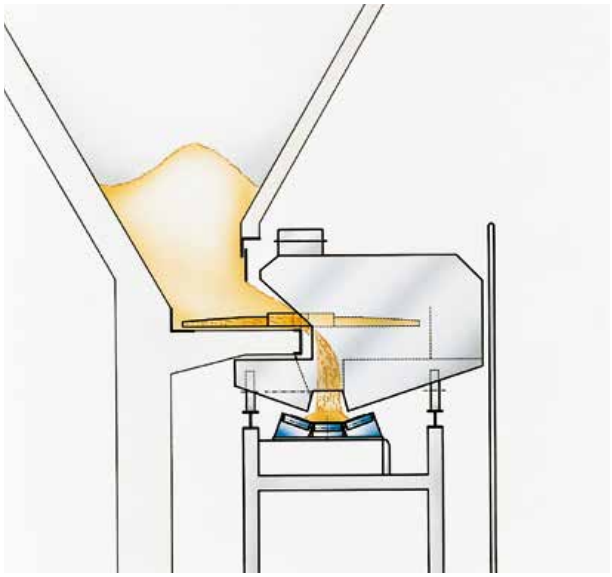

BEW with single sided discharge

Installed on the belt conveyor supporting structure, the Rotary Discharge Machine moves along the hopper shelf and reclaims the bulk material. The drive unit and electrical package are safely stored inside the dust-tight casing of the machine.

BEW with single swivel drive for single sided discharge

Installed on the belt conveyor supporting structure, the Rotary Discharge Machine travels to defined areas of the hopper where it reclaims the bulk material. A high speed mode in the travel drive allows to reach these areas quickly. The main drive with all its components forms a swivel unit installed on the trolley.

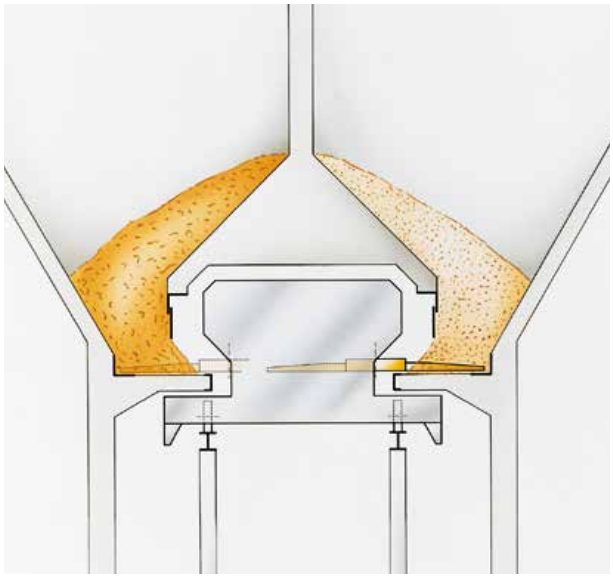

BEW with double swivel drive for single sided discharge on both sides

Installed on the belt conveyor supporting structure, the Rotary Discharge Machine travels to defined areas of the hopper. The discharge wheel swivels between the shelfs on both sides of the hopper. A high speed mode in the travel drive allows to reach these areas quickly. The main drive with all its components forms a swivel unit installed on the trolley.

Rotary Discharge Machine type BEW-FL with weigh feeder

Raw material handling in a Cement Plant

Three Rotary Discharge Machines are installed underneath a row of hoppers storing a total of 9,000 t of limestone, marl and dolomite. In order to obtain the required mixture directly when reclaiming the different raw materials from the hoppers for subsequent mill feeding, the reclaim capacity of the three discharge machines is controlled by a Weigh Belt Feeder forming part of the mobile discharge machine.

The actual volume to be reclaimed by the discharge machine from the three hoppers is determined in the laboratory. Adequate adjustment of the total reclaim capacity is made in the mill control room. The mixture ratio remains unchanged.

On account of the homogeneous volumetric reclaim through the hopper openings, an accuracy of +/- 1% can be achieved with the Weigh Feeders.

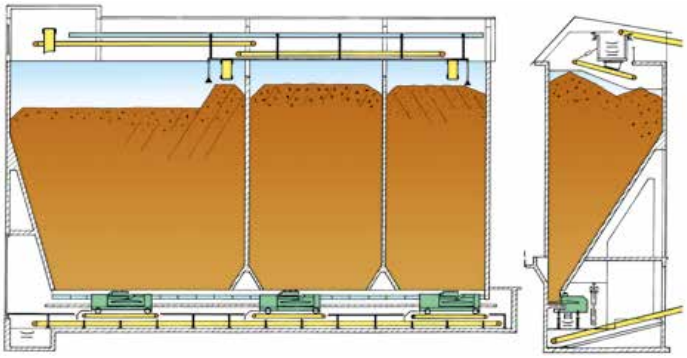

Storage capacity	9,000 t
Material	limestone and marl of 0 – 60 mm
Humidity	max. 14 %
Capacity of each discharge machine	30 – 180 t/h
Installed power	20 kW
Rotating speed of discharge wheels	adjustable from 0.5 to 5 rpm
Travel speed	1 and/or 0.45 m/min
Weigh belt feeder width	800 mm

Data sheet

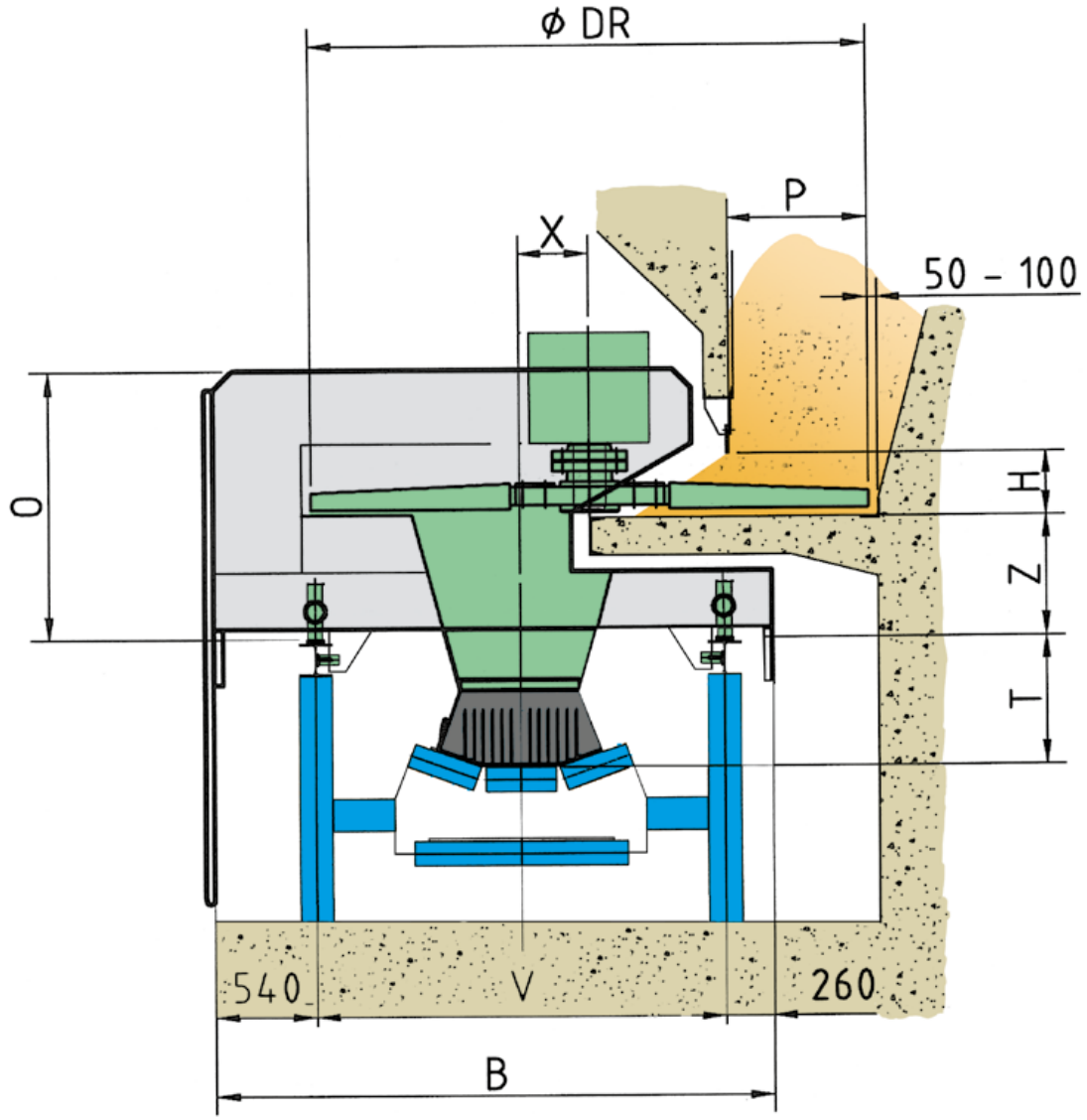

Rotary Discharge Machine – Low Profile Model

discharge wheel diameter	discharge opening height	penetration depth	overall width	overall height	track	hopper shelf to rail height	rail to belt feeder height	theoretical capacity Q (m³/h) single sided discharge with wheel speed n (rpm) range 1:10 circular speed at wheel tip				max. admissible travel speed
DR	H	**P**	**B**	**O**	**V**	**Z**	**T**	**U = 0.3** m/s		**U = 3.0** m/s		**V**
(mm)	(mm)	(mm)	(mm)	(mm)	(mm)	(mm)	(mm)	(m³/h)	(rpm)	(m³/h)	(rpm)	(m/min)
2,000	200	400	2,300	1,450	1,500	600	500	47	(2.90)	470	(29.0)	6.35
2,500	250	450	2,650	1,500	1,850	650	550	69	(2.28)	690	(22.8)	6.35
3,000	300	700	3,000	1,600	2,200	650	700	112	(1.91)	1,120	(19.1)	6.35
3,500	350	800	3,300	1,700	2,500	700	750	151	(1.63)	1,510	(16.3)	6.35
4,000	400	1,000	3,600	1,850	2,800	750	800	151	(1.63)	2,050	(14.3)	6.35

Standard dimensions and capacity. Further dimensions and capacities on request.

Rotating Rotary Discharge Machine type BEW-K

For large silos with a 5 m to 12 m diameter

The discharge wheel undercuts the material column and guides the material to the central outlet chute.

- First in / First out
- Simultaneous feeding and discharge
- Proportional reclaim
- Easy access

Rotating Rotary Discharge Machine

Culley Power Station, Indiana – USA

In the coal-fired plant in Indiana the FGD-gypsum, a by-product of the flue gas desulphurisation process, is stored in concrete silos. With an average humidity of 8 – 10%, sometimes even 15%, the FGD-gypsum is a heavy and sticky material with poor flow characteristics. The exact data of this material were determined by tests carried out in the LOUISE laboratory and the reclaim of each silo is now performed with a rotating rotary discharge machine designed to suite the specific characteristics revealed by these tests.

Each machine reclaims a total of 500 t/h, a capacity reached within 15 seconds, and loads onto 20 ton trucks. With normal loading conditions, the material volume of each silo is unloaded within 8 hours. In order to provide easy access, the discharge machine bottom and outlet chute are fitted directly underneath the discharge arms. The bottom rotates with the discharge wheel and the machine may be entered from the side opposite to the discharge arms.

Storage capacity	2 silos of 1,000 m^3 each
Diameter of each silo	8 m
Height of each silo	20 m
Installed power	75 kW
Discharge capacity of each discharge machine	500 t/h
Rotating speed of discharge wheel	adjustable from 0.3 to 3 rpm
Diameter of discharge wheel	4,500 mm

Rotating rotary discharge machine type BEW-K

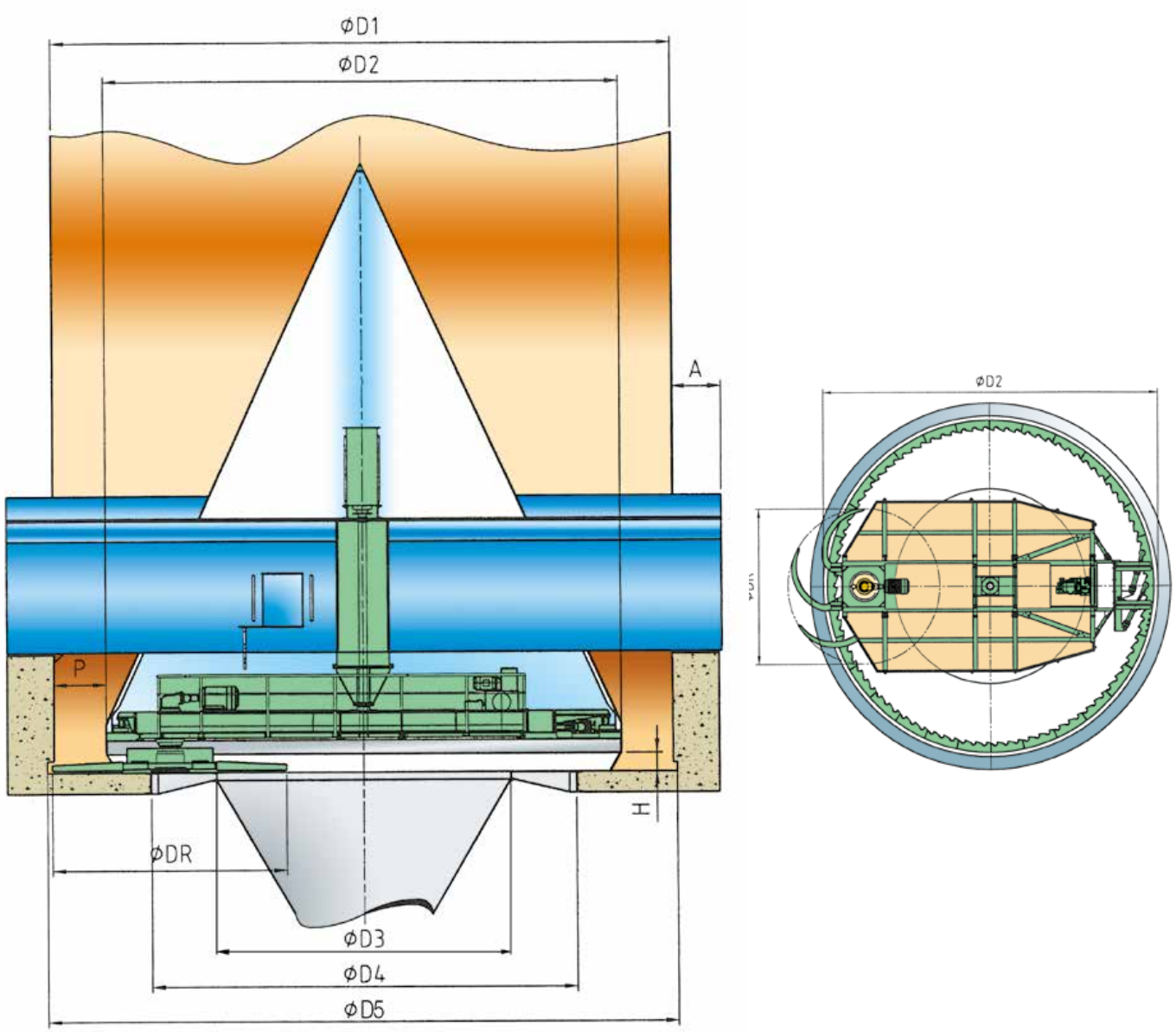

Rotating Rotary Discharge Machine type BEW-K

diameter silo	diameter discharge wheel	diameter cone	diameter floor ring opening	diameter concrete floor opening	diameter incl. undercut	max. protrusion of cone girder	discharge opening height	penetration depth	theoretical capacity Q (m³/h) with wheel speed n (rpm) range 1:10 circular speed at wheel tip			
D1	**DR**	**D2**	**D3**	**D4**	**D5**	**A**	**H**	**P**	**U = 0.3** m/s		**U = 3.0** m/s	
(mm)	(mm)	(mm)	(mm)	(mm)	(mm)	(mm)	(mm)	(mm)	(m³/h)	(rpm)	(m³/h)	(rpm)
5,000	3,000	3,600	1,200	1,950	5,140	600	300	700	112	(1.91)	1,120	(19.1)
6,000	3,600	4,400	1,300	2,350	6,140	700	350	800	155	(1.67)	1,550	(16.7)
8,000	4,500	6,000	2,200	4,750	8,140	900	450	1,000	247	(1.27)	2,470	(12.7)
10,000	4,500	8,000	3,700	6,250	10,140	900	450	1,000	247	(1.27)	2,470	(12.7)
12,000	4,500	10,000	5,700	8,250	12,140	900	450	1,000	247	(1.27)	2,470	(12.7)

Standard dimension and capacity. Further dimensions and capacities on request.

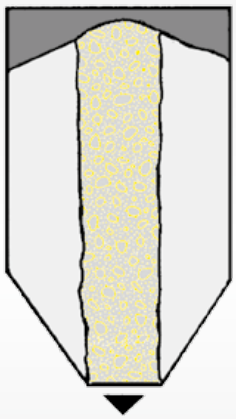

Ratholing

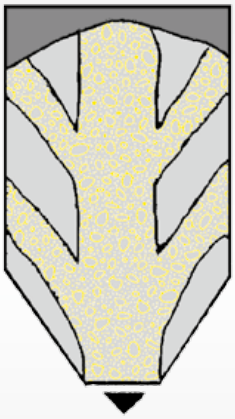

Core flow

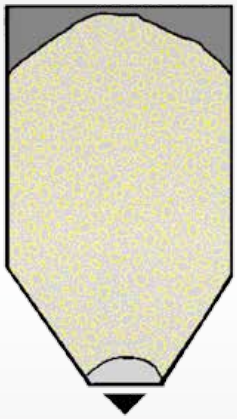

Bridging

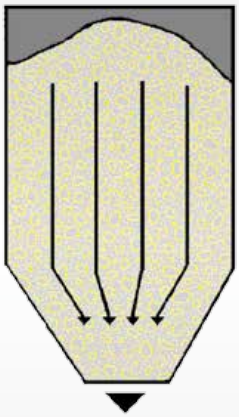

Mass flow

Bulk material testing in our laboratory

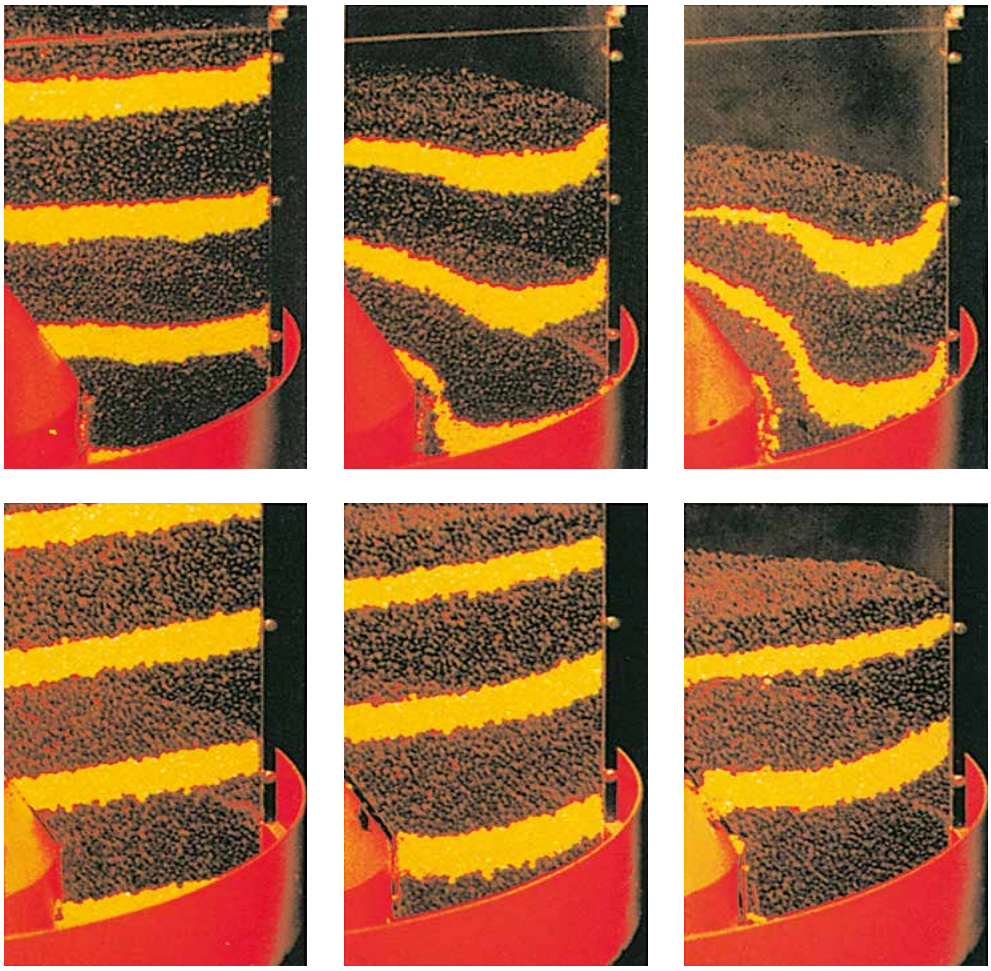

Bulk material tests

To determine the physical and mechanical properties and behaviour of specific bulk materials, our laboratory incorporates a large variety of testing equipment. Various test methods allow to determine the correct application of our products, e.g. shear testing.

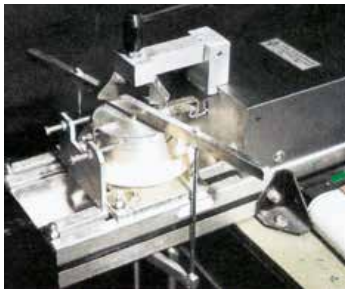

Jennicke shear cell

Components

5 BEW-K's 10,000/4,500 during assembly in the workshop

Block gear units for BEW-BL

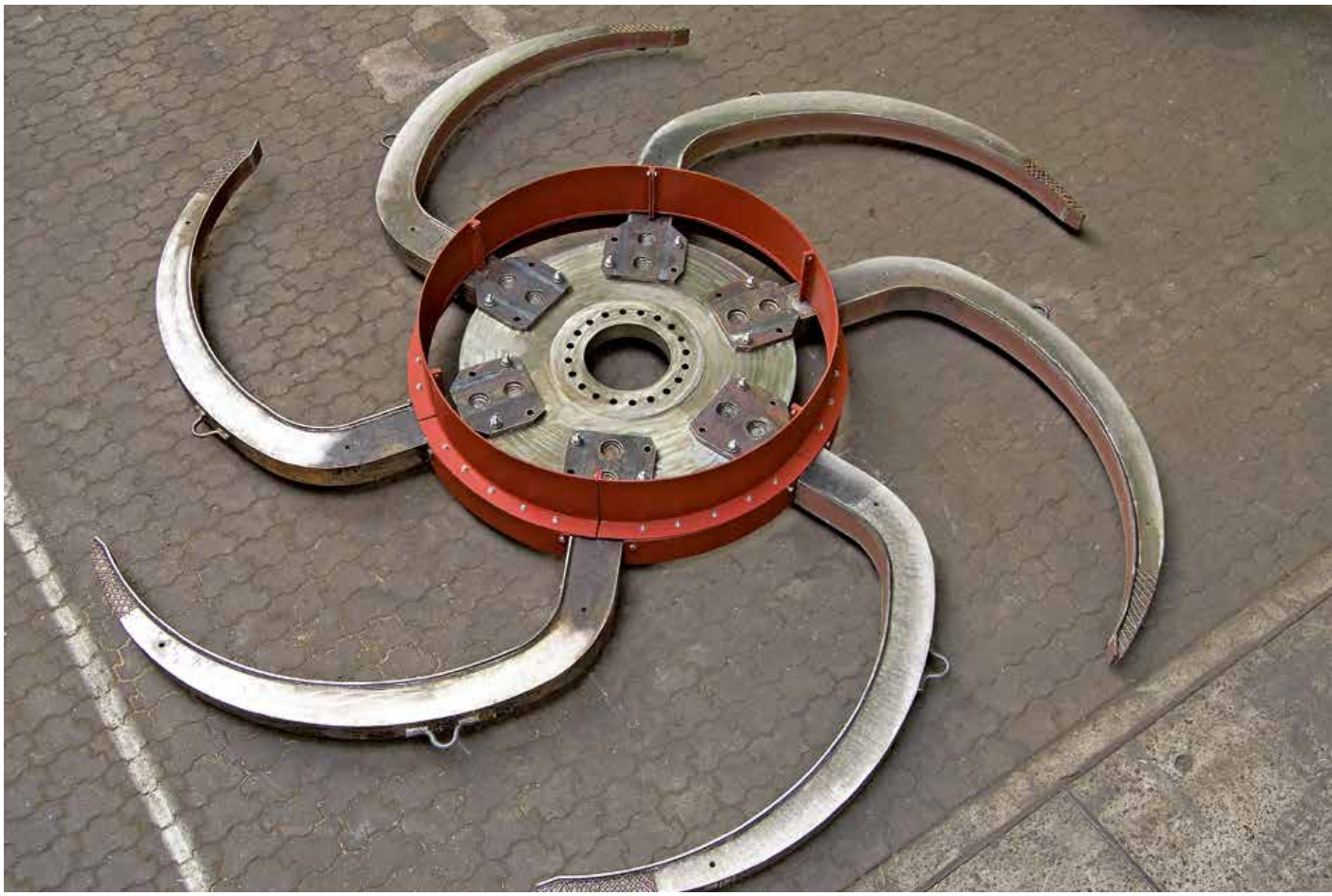

BEW-K discharge wheel, Ø 4,500 mm

Chassis of BEW-K, view onto hydraulic cylinders for rotation

Installation of new bucket strand

Conversions and Refurbishments

- Upgrading of existing plant components
- Targeting increased efficiency
- Higher output
- Improved availability

With our expert team of engineers planning selective modernisation measures, we pay special attention to the upgrading of existing plant components, targeting increased efficiency, higher output rates and improved availability.

Upgrading of your materials handling and storage equipment to state-of-the-art technology is achieved through a tailor-made refurbishment process under optimum utilisation of time and budget.

Most of the existing components are re-used in the refurbishment process to save cost.

Engineered conversions and refurbishments for increased efficiency and output are performed on AUMUND equipment as well as on the equipment of other manufacturers.

Pre-assembly of chain strands

After Sales Service

Customer Proximity around the World
At AUMUND, service does not end at the sale of the equipment. It's the beginning of a long-term partnership. AUMUND offers you a full range of services – from commissioning to the delivery of quality spare and wear parts to customized preventive maintenance programs and equipment upgrading. The benefits for you: Maximum equipment efficiency at lower operating cost.

Commissioning and Field Service
Today, presence "on the spot" is an absolute "must". Therefore, our commissioning and service engineers operate from support centers on all continents to guarantee immediate and competent support.

Spare and Wear Parts
A comprehensive range of genuine spare parts is available for our entire product range from stocks in Germany, Hong Kong and the USA. Our product specialists provide assistance and respond instantly.

Retrofits & Modernisation
Aged and worn equipment? Capacity increase needed? Too high operating cost? AUMUND "just as new" retrofits are economical and tailor-made solutions for improving your existing equipment at reasonable cost.

Preventive Maintenance
Knowing beforehand that service will be needed allows you to schedule downtime and save money with timely repairs. Repairs or retrofits can be accurately anticipated allowing for the downtime to be at the most convenient times and at the lowest possible cost.

THE AUMUND GROUP

GERMANY

AUMUND Fördertechnik GmbH
Saalhoffer Str. 17
47495 Rheinberg
Phone: +49 - 2843 - 72 0
Fax: +49 - 2843 - 6 02 70
info@aumund.de
www.aumund.com

AUMUND Logistic GmbH
Saalhoffer Str. 17
47495 Rheinberg
Phone: +49 - 2843 - 72 0
Fax: +49 - 2843 - 7 24 73
logistic@aumund.de
www.aumund.com

SCHADE Lagertechnik GmbH
Bruchstraße 1
45883 Gelsenkirchen
Phone: +49 - 209 - 50 31 60
Fax: +49 - 209 - 50 31 62 88
sales@schade-lagertechnik.com
www.schade-lagertechnik.com

GREAT BRITAIN

SAMSON Materials Handling Ltd.
Gemini House Cambridgeshire
Business Park, 1 Bartholomew`s Walk
Ely, Cambridgeshire CB7 4EA
Phone: +44 - 1353 - 665 001
Fax: +44 - 1353 - 666 734
sales@samson-mh.com
www.samson-mh.com

INDIA

AUMUND Engineering Private Ltd.
2nd Floor, Lakshmi Neela Rite Choice
Chambers · 9, Bazulla Road,
T. Nagar Chennai - 600 017
Phone: +91 - 44 - 4393 63 00
Fax: +91 - 44 - 2815 60 46
aumund@vsnl.com

HONG KONG SAR

AUMUND Asia (H.K.) Limited
Unit 3B & 5, 30/F.
148 Electric Road
North Point
Hong Kong
Phone: +852 - 3695 - 43 33
Fax: +852 - 3695 - 43 11
info@aumund-asia.com

DUBAI U.A.E.

AUMUND Fördertechnik GmbH Representative Office
P.O. Box 35291
Dubai, UAE
Phone: +971 - 4 - 2823762
catalina@aumund.com

THE NETHERLANDS

AUMUND Holding B.V.
Wilhelminapark 40
5911 EE Venlo
Phone: +31 - 77 - 320 01 11
Fax: +31 - 77 - 320 07 28
info@aumund-holding.nl

SWITZERLAND

AUMUND AG
Arther Str. 3
6301 Zug
Phone: +41 - 41 - 710 10 82
Fax: +41 - 41 - 710 42 02
info@aumund.ch

RUSSIA

AUMUND Representative Office
German-Russian House, Office 44
ul. Malaja Pirogovskaja 5
119435 Moscow / Russia
Phone: +7 - 495 - 287 90 02
Fax: +7 - 495 - 287 90 06
info@aumund.ru

SCHADE Representative Office
German-Russian House, Office 44
ul. Malaja Pirogovskaja 5
119435 Moscow / Russia
Phone: +7 - 495 - 287 90 03
Fax: +7 - 495 - 287 90 06
info@aumund.ru

FRANCE

AUMUND France S.A.R.L.
43, rue de Trévise · F 75009 Paris
Phone: +33 - 1 - 42 46 72 72
Fax: +33 - 1 - 42 46 72 74
aumund@aumund.fr

BRAZIL

AUMUND Ltda.
Avenida Eng. Luis Carlos Berrini
716 - 4.andar - conj. 41
04571-000 - São Paulo / SP
Phone: +55 - 11 - 3059 0160
Fax: +55 - 11 - 3059 0161
aumund@aumund.com.br

USA

AUMUND Corporation
1701 Barrett Lakes Blvd
Barrett Lakes Center I
Suite 450
Kennesaw, GA 30144
Phone: +1 - 770 - 226 - 95 78
Fax: +1 - 770 - 953 - 48 44
sales@aumundusa.com

P.R. CHINA

AUMUND Machinery Trading (Beijing) Co. Ltd.
Rm. 7-8, 22-F, East Ocean Centre
No. 24 Jianguomenwai Avenue
Chaoyang District
Beijing 100004
Phone: +86 - 10 - 65 15 58 13 / 14
Fax: +86 - 10 - 65 15 58 15
aumund@aumund.cn

AUMUND Headquarters in Rheinberg, Germany

AUMUNDGROUP

Your partner for all requirements regarding material handling and storage.
We design, engineer, manufacture, erect and service reliable equipment.
Reputation and competence proven by more than 10 000 installations in over 100 countries.

AUMUND Foerdertechnik GmbH · Saalhoffer Str. 17 · 47495 Rheinberg (Germany)
Tel.: + 49 (0) 28 43-720 · Fax: + 49 (0) 28 43-6 02 70 · info@aumund.de

www.aumund.com

(GB) Technical data subject to change without notice A-GB-06/14-MA. © 2014 by AUMUND Holding B.V. All rights reserved.